ENGINEERING
TOMORROW

Data sheet

Pilot valves

Types CVP, CVPP, CVC, CVE, EVM and CVH

Pilot valves for direct mounting in main valves

Pilot valves are intended for mechanical control of a main valve and are ready for direct installation in the top cover of the main valve.

Small capacities can be controlled by the pilot valve directly without a main valve when installed in the matching CVH housing.

The extensive range of Danfoss pilot valves include:

- Constant-pressure pilot valve, type CVP
- Differential-pressure pilot valve, type CVPP
- Pressure-operated pilot valve with reference pressure connection, type CVC
- Electronically operated constant-pressure pilot valve, type CVE
- Solenoid pilot valve, type EVM (NC)
- Solenoid pilot valve, type EVM (NO)
- Housing, type CVH for pilot valves, for mounting in external pilot lines

Features

- Applicable to HCFC, non flammable HFC, R717 (Ammonia) and R744 (CO_2). The use of Pilots with flammable hydrocarbons is not recommended
- Extremely accurate pressure and temperature control.
- The pilot valves can be screwed directly into the main valve, thus avoiding the necessity of welding, soldering and separate pilot lines.
- The pilot valves can be mounted directly in the ICS, PM or ICF valve or it can be connected via an external pilot line and a CVH housing.
- All pilot valves can be used on all sizes of main valves.
- Several pilot valves can be connected in series or in parallel to provide many functions in the same ICS or ICF valve.
- All pilot valves are delivered with gaskets.

Contents

	Page
Features	1
Design	3
Technical data	3
Constant-pressure pilot valve, type CVP	4
Differential-pressure pilot valve, type CVPP	6
Pressure-operated pilot valve with reference pressure connection, type CVC	8
Electronically operated constant-pressure (constant pressure difference) pilot valve, type CVE	10
Solenoid pilot valve, type EVM (NC)	12
Solenoid pilot valve, type EVM (NO)	12
Housing for pilot valves, type CVH, for mounting in external pilot lines	13

Design

Each pilot valve is designed to give the optimum control accuracy within the specific function range of the valve.

Several pilot valves can be mounted in series and/or in parallel on the main valve (ICS, ICF or the discontinued PM) to suit numerous applications.

Mounted in a CVH housing, the pilot valves can be used in external lines, either as independently operating valves or as external control valves for the main valve.

The pilot valves can be used for all sizes of ICS and for ICF 50/65.

Technical data

Refrigerants
Applicable to HCFC, non flammable HFC, R717 (Ammonia) and R744 (CO_2). The use of pilot valves with flammable hydrocarbons is not recommended

Temperature range:
-60/+120°C (-76/+248°F)

Pressure range:
The pilot valves are designed for a max. working pressure of 52 bar g (754 psig)

Pressure setting ranges are given separately for the specific pilot valve.

For further information please see installation guides for ICS or ICF valves.

Constant-pressure pilot valve, type CVP

Design and function

CVP

CVP is a constant-pressure pilot valve for a max. working pressure (MWP) of 52 bar (754 psi) and with 3 setting ranges covering settings of -0.66 to 52 bar (19.5 in. Hg to 754 psi).

This pilot valve is used for maintaining a constant pressure on the inlet side of the main valve.

When a CVP is mounted in a CVH housing, it can be used as a separate constant-pressure valve or a pressure relief valve (e.g. to prevent hydraulic overpressure in an entrapped liquid).

Please note:
The CVP pilot can be used for most applications in the refrigeration system including hot gas relief systems.

Technical data

The k_v/C_v value is measured with the pilot valve mounted in a CVH housing for external pilot lines. The value can vary slightly, depending on the setting value.

Valve type	Max. working pressure		k_v / C_v value		Temperature range		Pressure range		Code no.
	[bar]	[psi]	[m³/h]	[US gal/min]	[°C]	[°F]	[bar]	[psi]	
CVP-L	52	754	0.40	0.46	-60/+120	-76/+248	-0.66 - 7	19.5 in Hg to 102	027B0920
CVP-M	52	754	0.40	0.46	-60/+120	-76/+248	4 - 28	58 - 406	027B0921
CVP-H	52	754	0.40	0.46	-60/+120	-76/+248	25 - 52	363 - 754	027B0922

P-band for a valve system regulated by CVP and ICS or PM main valve: < 0.2 bar g (2.9 psi g)

Dimensions and weights

CVP

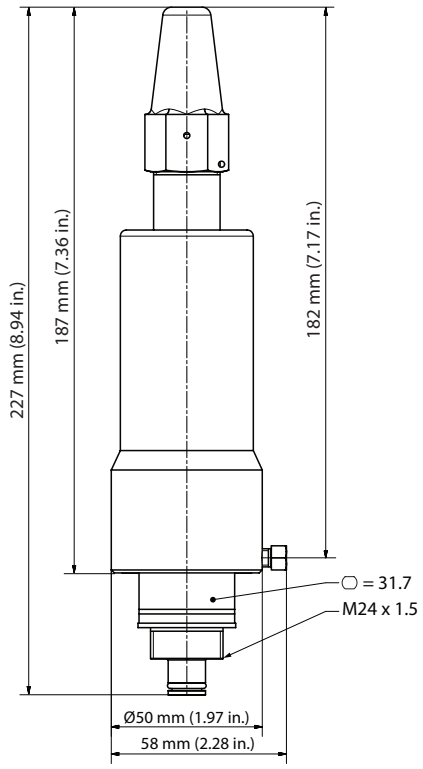

Weight: Approx. 1.46 kg (3.22 lbs)

Constant-pressure pilot valve, type CVP *- continued*

Material specification - CVP

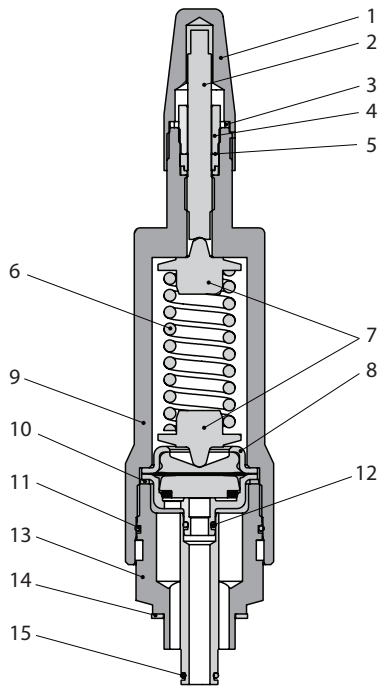

No.	Part	Material
1	Protective cap	Steel
2	Setting spindle	Stainless steel
3	Cap seal	Nylon
4	Packing gland	Steel
5	Seal	Teflon
6	Spring	Steel
7	Spring plate	Steel
8	Diaphragm assembly	Stainless steel
9	Valve bonnet	Steel
10	Cover seal	Alu
11	Back up O-ring	
12	O-ring	
13	Base part	Steel
14	Seal	Fiber gasket
15	O-ring	

Differential-pressure pilot valve, type CVPP

Design and function

CVPP

CVPP is a differential-pressure pilot valve for a max. working pressure (MWP) of 52 bar (754 psi) and with 2 setting ranges covering settings of -0.66 to 28 bar (19.5 in. Hg to 406 psi).

The pilot valve is used for maintaining a constant differential pressure between the CVPP valve reference pressure connection and the main valve inlet pressure.

CVPP incorporates a diaphragm so that the reference pressure and the refrigerant in the valve are physically separated. The pilot valve can therefore also be used as a pneumatic control valve either to control a main valve or as a separate pneumatic valve mounted in a CVH housing.

Technical data

The k_v/C_v value is measured with the pilot valve mounted in a CVH housing for external pilot lines. The value can vary slightly, depending on the setting value.

Valve type	Max. working pressure		k_v / C_v value		Temperature range		Pressure range		Code no.
	[bar]	[psi]	[m³/h]	[US gal/min]	[°C]	[°F]	[bar]	[psi]	
CVPP-L	52	754	0.40	0.46	-60/+120	-76/+248	-0.66 - 7	19.5 in Hg to 102	027B0930
CVPP-M	52	754	0.40	0.46	-60/+120	-76/+248	4 - 28	58 - 406	027B0931

P-band for a valve system regulated by CVPP and ICS, ICF or PM main valve: <0.2 bar g (2.9 psi g).

Dimensions and weights

CVPP

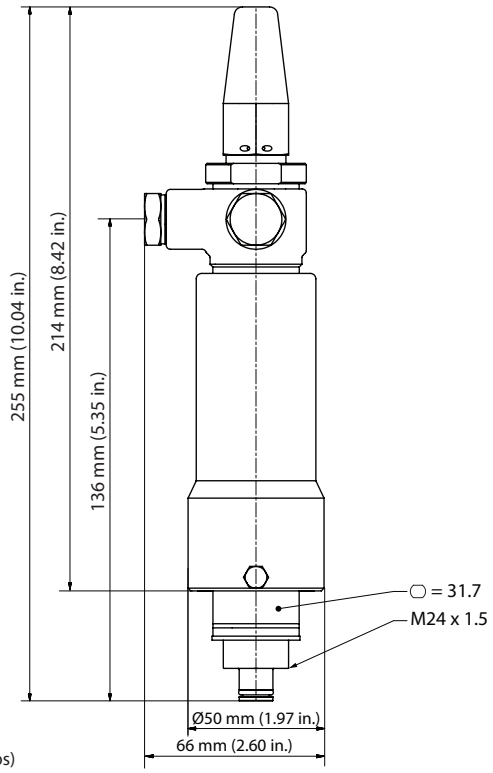

Weight: Approx. 1.75 kg (3.86 lbs)

Differential-pressure pilot valve, type CVPP) *- continued*

Material specification - CVPP

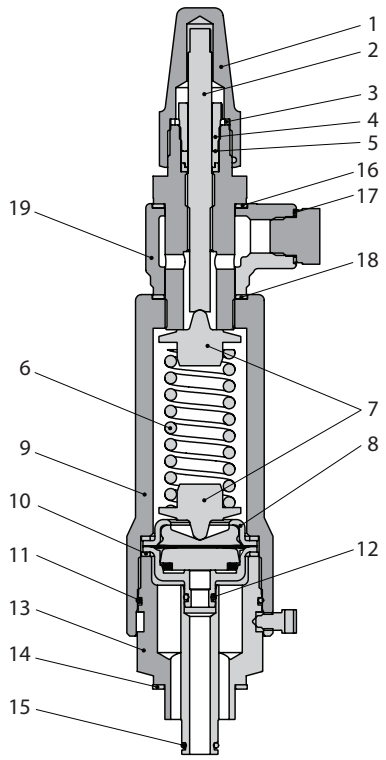

No.	Part	Material
1	Protective cap	Steel
2	Setting spindle	Stainless steel
3	Cap seal	Nylon
4	Packing gland	Steel
5	Seal	Teflon
6	Spring	Steel
7	Spring plate	Steel
8	Diaphragm assembly	Stainless steel
9	Valve bonnet	Steel
10	Cover seal	Alu
11	Back up O-ring	
12	O-ring	
13	Base part	Steel
14	Seal	Fiber gasket
15	O-ring	
16	Seal	Fiber gasket
17	Plug for external pressure	Steel
18	Seal	Fiber gasket
19	Banjo	Steel

Pressure-operated pilot valve with reference pressure connection, type CVC

Design and function

CVC

CVC is a constant pressure pilot valve at an external reference point for a max. working pressure (MWP) of 52 bar (754 psi) and with 2 setting ranges covering settings of -0.66 to 28 bar (19.5 in. Hg to 406 psi).

The CVC-pilot is designed to maintain a constant pressure at an external reference point in the system.

CVC pilot valve installed in an ICS servo valve are used for e.g.:

- Outlet pressure regulator to regulate max. suction pressure, e.g. as a compressor crankcase pressure regulator;
- Outlet pressure regulator as a pressure limiter, e.g. for hot gas defrost of hot gas lines.

The reference pressure must be connected to the low-pressure side of the system.

The k_v/C_v value is measured with the pilot valve mounted in a CVH housing for external pilot lines. The value can vary slightly, depending on the setting value.

Technical data

Valve type	Max. working pressure		k_v / C_v value		Temperature range		Pressure range		Code no.
	[bar]	[psi]	[m³/h]	[US gal/min]	[°C]	[°F]	[bar]	[psi]	
CVC-L	52	754	0.20	0.23	-60/+120	-76/+248	-0.66 - 7	19.5 in Hg to 102	027B0940
CVC-M	52	754	0.20	0.23	-60/+120	-76/+248	4 - 28	58 - 406	027B0941

P-band for a valve system regulated by CVC and ICS/PM/PMC: < 0.3 bar g (4.4 psi g)

Dimensions and weights

CVC

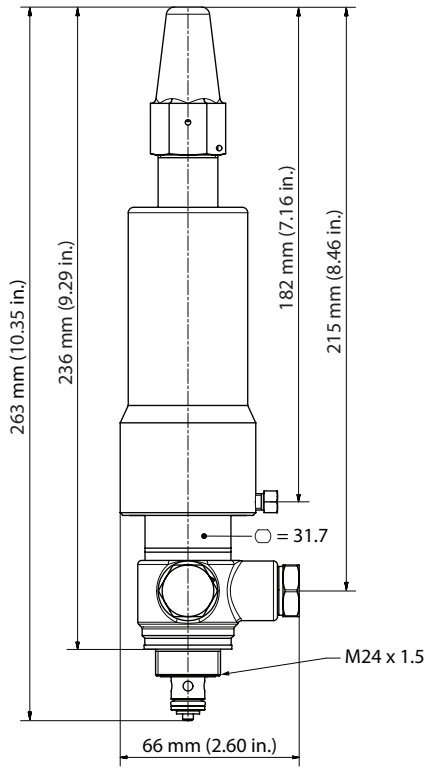

Weight: Approx. 1.78 kg (3.92 lbs)

Pressure-operated pilot valve with reference pressure connection, type CVC - *continued*

Material specification - CVC

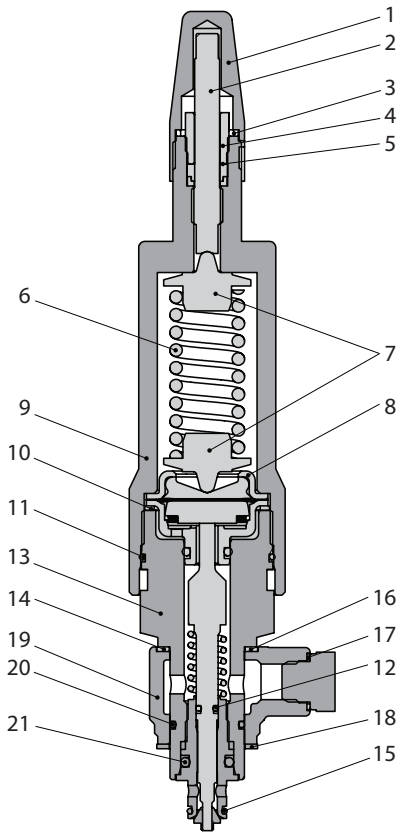

No.	Part	Material
1	Protective cap	Steel
2	Setting spindle	Stainless steel
3	Cap seal	Nylon
4	Packing gland	Steel
5	Seal	Teflon
6	Spring	Steel
7	Spring plate	Steel
8	Diaphragm assembly	Stainless steel
9	Valve bonnet	Steel
10	Cover seal	Alu
11	Back up O-ring	
12	O-ring	
13	Base part	Steel
14	Seal	Fiber gasket
15	O-ring	
16	Seal	Fiber gasket
17	Plug for external pressure	Steel
18	Seal	Fiber gasket
19	Banjo	Steel
20	O-ring	
21	O-ring	

Electronically operated constant-pressure (constant pressure difference) pilot valve, type CVE

Design and function

CVE

CVE is, when fitted with the ICAD stepper-motor, a constant pressure pilot valve with electronic change of set-point for a max. working pressure (MWP) of 52 bar (754 psi) and with electronic controlled full range settings of -0.66 to 8 bar gauge (19.5 in. Hg to 116 psi). The CVE interface to the ICAD is hermetic closed and rotation force is transferred from the ICAD by magnetic forces.

The CVE pilot valve is designed to maintain a constant and very accurate inlet pressure of an ICS servo valve, e.g. evaporator pressure regulation.

The CVE/ICAD unit can be either stand-alone or connected to a remote EKE 347 or PLC with appropriate controller function.

The stand-alone arrangement allows the on-site ICAD setting - and the remote wiring allows remote setting of the desired set pressure.

Technical data

The k_v/C_v value is measured with the pilot valve mounted in a CVH housing for external pilot lines. The value can vary slightly, depending on the setting value.

Valve type	Max. working pressure		k_v / C_v value		Temperature range		Pressure range		Code no.
	[bar]	[psi]	[m³/h]	[US gal/min]	[°C]	[°F]	[bar]	[psi]	
CVE-L	52	754	0.40	0.46	-60/+120	-76/+248	-0.66 - 8	19.5 in. Hg to 116	027B0980

Dimensions and weights

CVE

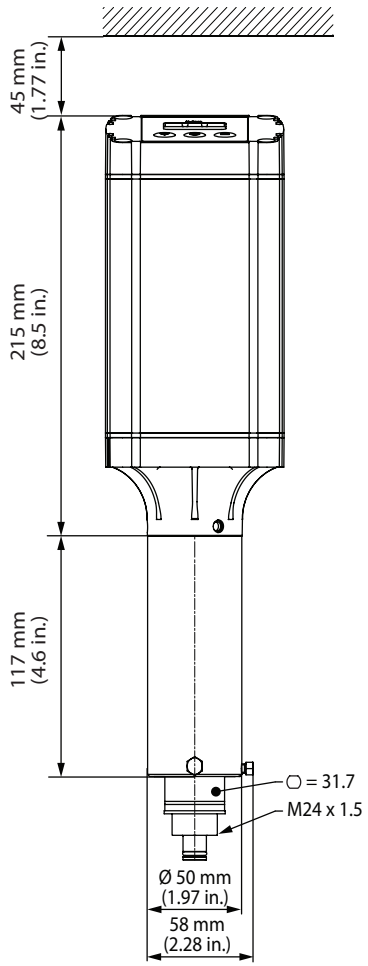

Weight: Approx. 1.75 kg (3.86 lbs)

Electronically operated constant-pressure (constant pressure difference) pilot valve, type CVE - *continued*

CVE Pressure setting (see the installation guide DKRCI.PI.HVO.J for ICAD setup)

barg	-0.66	0	1	2	3	4	5	6	7	8
psig	19.5 in. Hg	0	14.5	29.0	43.5	58.0	72.5	87.0	101.5	116.0
mA	18.3	17.1	15.9	14.7	13.5	12.3	11.1	9.9	8.7	7.5
ICAD reading %	90%	83%	75%	67%	60%	53%	45%	37%	30%	23%

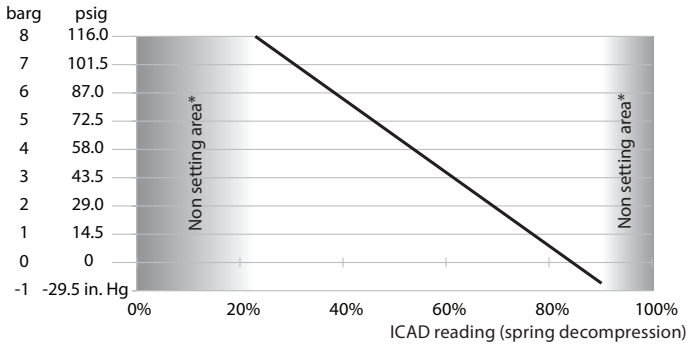

* These areas are dedicated regulation band for the pilot valve. It is recommended not to exceed the limits in above table

Material specification - CVE

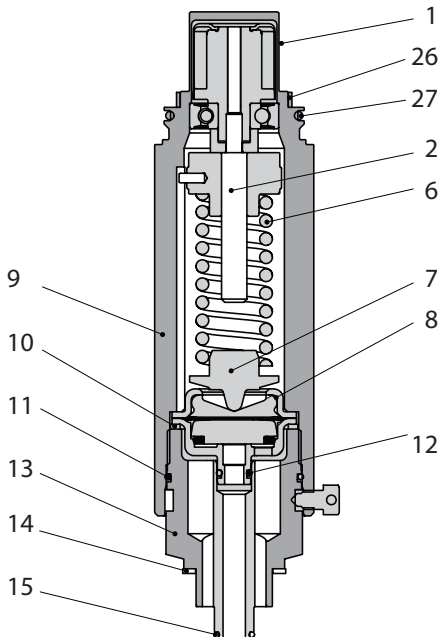

No.	Part	Material
1	Adapter	Stainless steel
2	Setting spindle	Stainless steel
6	Spring	Steel
7	Spring plate	Steel
8	Diaphragm assembly	Stainless steel
9	Valve bonnet	Stainless steel
10	Cover seal	Alu
11	Back up O-ring	
12	O-ring	
13	Base part	Steel
14	Seal	Fiber gasket
15	O-ring	
26	Seal	Teflon
27	O-ring	Cloroprene (Neoprene)

Solenoid pilot valve, type EVM (NC)

Solenoid pilot valve, type EVM (NO)

Design and function

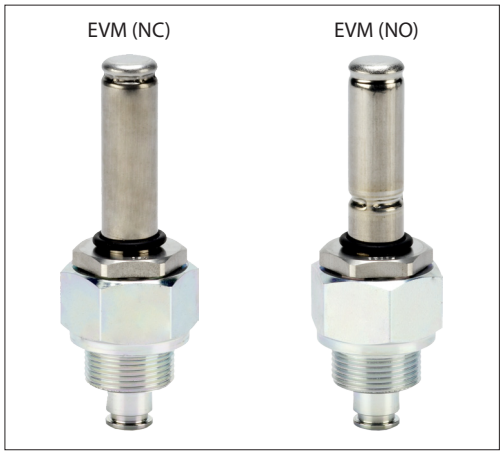

EVM is a solenoid pilot valve for use when on/off operation of the main valve is required. EVM valves are intended for use with Danfoss solenoid valve coils ("Coils for solenoid valves", data sheet DKRCC.PD.BS0.F).

Together with CVH, an EVM can also be used as an independent solenoid valve.

Technical data

The k_v/C_v value is measured with the pilot valve mounted in a CVH housing for external pilot lines.

MOPD: Maximum opening differential pressure with a 10 W a.c. coil.

With:
20 W a.c. coil: 40 bar (580 psi)
20 W d.c. coil: 14 bar (203 psi)

MCPD: Maximum closing differential pressure with a 10/12 W a.c. coil or a 20 W d.c.coil.

Valve type	Max. working pressure		k_v / C_v value		Temperature range		Pressure range MOPD/MCPD		Code no.
	[bar]	[psi]	[m³/h]	[US gal/min]	[°C]	[°F]	[bar]	[psi]	
EVM NC	65	940	0.28	0.32	-60/+120	-76/+248	21	305	027B1120
EVM NO	52	754	0.12	0.14	-60/+120	-76/+248	19	276	027B1130
EVM NO	52	754	0.12	0.14	-60/+120	-76/+248	40	580	027B1132

Dimensions and weights

EVM

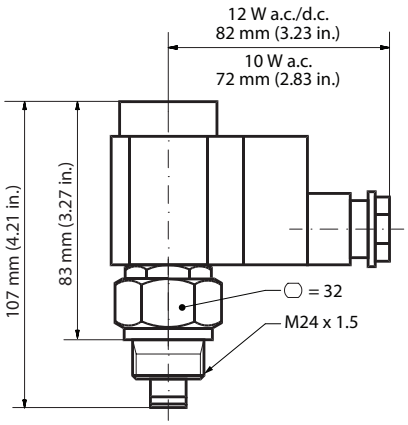

Weight: Approx. 0.25 kg (0.6 lbs) - without coil

Material specification

EVM

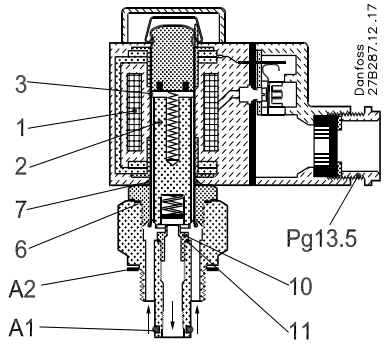

No.	Part	Material
1	Coil	
2	Armature	Stainless steel
3	Armature tube	Stainless steel
A2	Seal	Non-asbestos
A1	O-ring	Cloroprene (Neoprene)
6	Seal	Aluminium
7	Spacing ring	
8	Nut	
9	Lock button	
10	Valve body	Steel
11	Valve seat	Teflon (PTFE)

Housing for pilot valves, type CVH, for mounting in external pilot lines

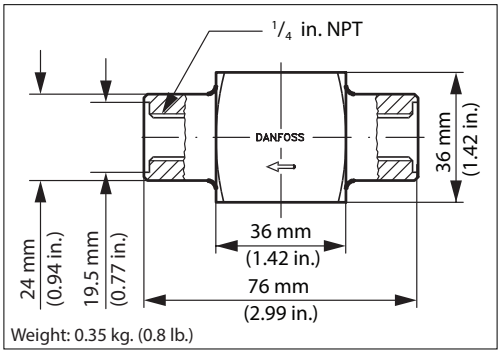

DN	Standard	Material	Code no.
Internal pipe thread			
6	ANSI/ASME B1.20.1	DIN 9SMnPb 28 W no. 1.0718	027F1159

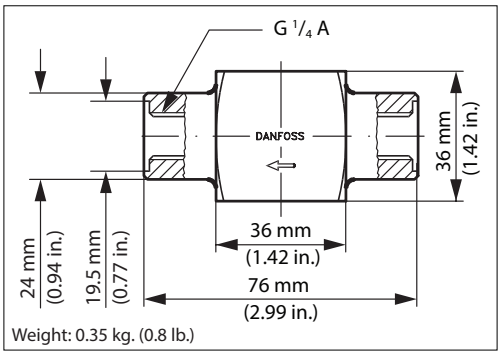

DN	Standard	Material	Code no.
Internal pipe thread			
6	ISO 228-1	DIN 9SMnPb 28 W no. 1.0718	027F1160

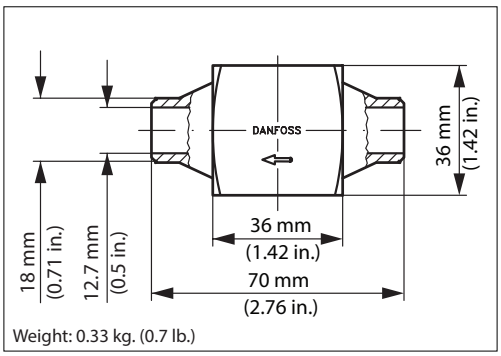

DN	Standard	Material	Code no.
⅜ in. butt weld			
10	ASME B 36.10M SCHEDULE 80	DIN. CK 15. W no. 1.1141	027F1047

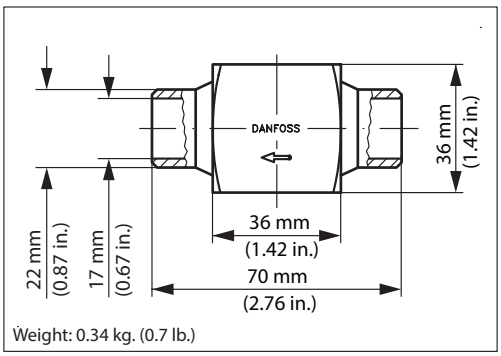

DN	Standard	Material	Code no.
½ in. butt weld			
15	ASME B 36.10M SCHEDULE 80	DIN. CK 15. W no. 1.1141	027F1090

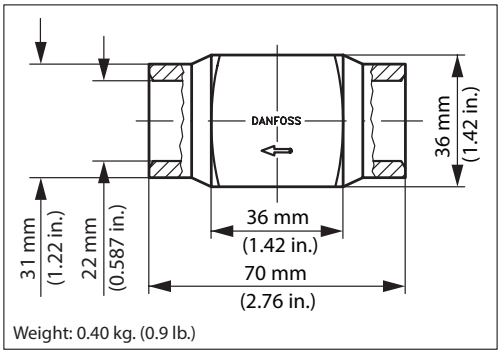

DN	Standard	Material	Code no.
½ in. socket weld			
15	ASME B 16.11	DIN. CK 15. W no. 1.1141	027F1091

Danfoss can accept no responsibility for possible errors in catalogues, brochures and other printed material. Danfoss reserves the right to alter its products without notice. This also applies to products already on order provided that such alterations can be made without subsequential changes being necessary in specifications already agreed.
All trademarks in this material are property of the respective companies. Danfoss and the Danfoss logotype are trademarks of Danfoss A/S. All rights reserved.