ENGINEERING
TOMORROW

Datasheets

Danfoss Reciprocating compressors
MT / MTZ / NTZ

FRCC.UD.151029.123849

www.danfoss.com/odsg

General Characteristics

Model number (on compressor nameplate)		**MTZ56HL4BVE**
Code number for Singlepack*		MTZ56-4VI
Code number for Industrial pack**		MTZ56-4VM
Drawing number		8502012g
Suction and discharge connections Suction connection Discharge connection Suction connection with supplied sleeve Discharge connection with supplied sleeve		Rotolock 1-3/4 " Rotolock 1-1/4 " Rotolock 7/8 " ODF 3/4 " ODF
Oil sight glass Oil equalisation connection Oil drain connection LP gauge port IPR valve		Threaded 3/8" flare SAE None Schrader 30 bar / 8 bar
Cylinders Swept volume Displacement @ Nominal speed	2 96,13 cm3/rev 16.7 m3/h @ 2900 rpm - 20.2 m3/h @ 3500 rpm	
Net weight Oil charge	39 kg 1,8 litre, POE - 160PZ	
Maximum system test pressure Low Side / High side Maximum differential test pressure	25 bar(g) / 30 bar(g) 30 bar	
Maximum number of starts per hour	12	
Refrigerant charge limit	5 kg	
Approved refrigerants	R404A, R507A, R134a, R407C, R407A, R407F	

Dimensions

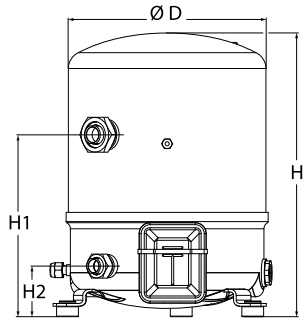

D=288 mm
H=413 mm
H1=265 mm
H2=74 mm
H3=- mm

Electrical Characteristics

Nominal voltage	380-400V/3/50Hz - 460V/3/60Hz
Voltage range	340-440 V @ 50Hz - 414-506 V @ 60Hz
Winding resistance (between phases) +/- 7% at 25ºC	2.39 Ω
Maximum Continuous Current (MCC)	12 A
Locked Rotor Amps (LRA)	64 A
Motor protection	Internal overload protector

Terminal box

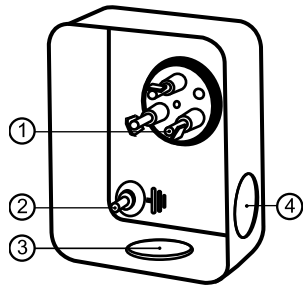

IP55 (with cable gland)
1: Spade connectors 1/4"
2: Earth M4-12
3: Knock-out Ø 21 mm (0.83")
4: Hole Ø 21 mm (0.83")

Recommended Installation torques

Oil sight glass	50 Nm
Power connections / Earth connection	Nm / 2 Nm
Mounting bolts	15 Nm

Parts shipped with compressor

Mounting kit with grommets, bolts, nuts, sleeves and washers
Suction & Discharge solder sleeves, rotolock nuts and gaskets (shipped with rotolock version only)
Initial oil charge
Installation instructions

Approvals : CE certified, UL certified (file SA6873), CCC certified
*Singlepack: Compressor in cardboard box
**Industrial pack: 6 Unboxed compressors on pallet (order per multiples of 6)

Danfoss can accept no responsibility for possible errors in catalogues, brochures and other printed material. Danfoss reserves the right to alter its products without notice.
This also applies to products already on order provided that such alternations can be made without subsequential changes being necessary in specifications already agreed.
All trademarks in this material are property of the respective companies. Danfoss, the Danfoss logotype and Maneurop are trademarks of Danfoss A/S. All rights reserved.

Rotolock accessories, suction side	Code no.
Solder sleeve, P07 (1-3/4" Rotolock, 7/8" ODF)	8153013
Angle adapter, C07 (1-3/4" Rotolock, 7/8" ODF)	8168008
Rotolock valve, V07 (1-3/4" Rotolock, 7/8" ODF)	8168032
Gasket, 1-3/4"	8156132

Rotolock accessories, discharge side	Code no.
Solder sleeve, P04 (1-1/4" Rotolock, 3/4" ODF)	8153008
Angle adapter, C04 (1-1/4" Rotolock, 3/4" ODF)	8168006
Rotolock valve, V04 (1-1/4" Rotolock, 3/4" ODF)	8168029
Gasket, 1-1/4"	8156131

Rotolock accessories, sets	Code no.
Angle adapter set, C07 (1-3/4"~7/8"), C04 (1-1/4"~3/4")	7703013
Valve set, V07 (1-3/4"~7/8"), V04 (1-1/4"~3/4")	7703006
Gasket set, 1", 1-1/4", 1-3/4", OSG gaskets black & white	8156009

Oil / lubricants	Code no.
POE lubricant, 160PZ, 1 litre can	7754019
POE lubricant, 160PZ, 2.5 litre can	120Z0573

Crankcase heaters	Code no.
PTC heater 27W,CE mark, UL	120Z0459
Belt type crankcase heater, 65 W, 230 V, CE mark, UL	7773107
Belt type crankcase heater, 65 W, 400 V, CE mark, UL	7773117
Belt type crankcase heater, 65 W, 460 V, CE mark, UL	120Z0466

Miscellaneous accessories	Code no.
Electronic soft start kit, MCI 15 C	7705006
Acoustic hood for 2 cylinder compressor	120Z0472
Oil equalisation nut	8153127

Spare parts	Code no.
Mounting kit for 1 and 2 cylinder compressor, including 3 grommets, 3 bolts	8156001
Oil sight glass with gaskets (black & white)	8156019
Gasket for oil sight glass (black chloroprene)	8156145
Service kit for terminal box 80 x 96 mm, including 1 cover, 1 clamp	8156134

Gaskets, sleeves and nuts

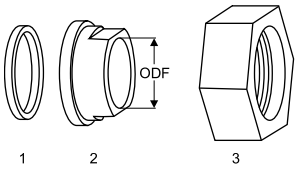

1: Gasket
2: Solder sleeve
3: Rotolock nut

Mounting kit

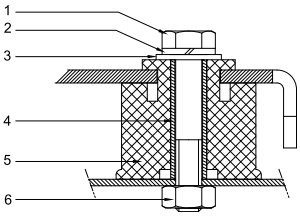

1: Bolt (3x)
2: Lock washer (3x)
3: Flat washer (3x)
4: Sleeve (3x)
5: Grommet (3x)
6: Nut (3x)

Danfoss can accept no responsibility for possible errors in catalogues, brochures and other printed material. Danfoss reserves the right to alter its products without notice.
This also applies to products already on order provided that such alternations can be made without subsequential changes being necessary in specifications already agreed.
All trademarks in this material are property of the respective companies. Danfoss, the Danfoss logotype and Maneurop are trademarks of Danfoss A/S. All rights reserved.

Performance data at 50 Hz, EN 12900 rating conditions

R404A

Cond. temp. in °C (tc)	Evaporating temperature in °C (to)								
	-30	-25	-20	-15	-10	-5	0	5	10
Cooling capacity in W									
30	2 833	4 001	5 466	7 268	9 449	12 051	15 115	18 682	22 794
35	2 439	3 509	4 849	6 498	8 499	10 893	13 722	17 026	20 847
40	2 074	3 049	4 266	5 765	7 588	9 776	12 371	15 415	18 948
45	1 734	2 616	3 712	5 062	6 709	8 694	11 058	13 843	17 090
50	1 414	2 205	3 182	4 386	5 859	7 643	9 778	12 306	15 268
55	-	1 810	2 670	3 730	5 032	6 616	8 524	10 798	13 478
60	-	1 426	2 172	3 090	4 222	5 609	7 293	9 314	11 714
Power input in W									
30	2 050	2 351	2 635	2 896	3 130	3 334	3 503	3 632	3 718
35	2 058	2 386	2 697	2 988	3 254	3 491	3 694	3 860	3 983
40	2 055	2 413	2 757	3 082	3 383	3 657	3 898	4 104	4 269
45	2 038	2 431	2 810	3 173	3 513	3 827	4 112	4 361	4 572
50	2 002	2 433	2 853	3 256	3 640	3 999	4 329	4 626	4 886
55	-	2 417	2 880	3 329	3 759	4 167	4 547	4 896	5 209
60	-	2 377	2 888	3 386	3 867	4 327	4 761	5 165	5 535
Current consumption in A									
30	5.22	5.51	5.81	6.11	6.40	6.66	6.87	7.02	7.09
35	5.23	5.54	5.87	6.21	6.53	6.83	7.09	7.29	7.42
40	5.23	5.57	5.93	6.31	6.68	7.03	7.34	7.60	7.79
45	5.21	5.58	5.99	6.41	6.83	7.23	7.61	7.93	8.19
50	5.17	5.58	6.04	6.51	6.99	7.45	7.89	8.28	8.62
55	-	5.57	6.07	6.60	7.14	7.68	8.18	8.65	9.07
60	-	5.53	6.09	6.69	7.30	7.90	8.49	9.04	9.54
Mass flow in kg/h									
30	89	123	164	212	269	336	412	500	600
35	83	116	156	203	258	323	398	484	582
40	76	109	148	194	248	311	384	468	564
45	70	102	140	185	238	300	371	453	547
50	63	95	132	176	228	288	358	439	530
55	-	88	124	167	218	277	346	424	514
60	-	81	117	159	209	267	334	411	499
Coefficient of performance (C.O.P.)									
30	1.38	1.70	2.07	2.51	3.02	3.61	4.32	5.14	6.13
35	1.19	1.47	1.80	2.17	2.61	3.12	3.71	4.41	5.23
40	1.01	1.26	1.55	1.87	2.24	2.67	3.17	3.76	4.44
45	0.85	1.08	1.32	1.60	1.91	2.27	2.69	3.17	3.74
50	0.71	0.91	1.12	1.35	1.61	1.91	2.26	2.66	3.12
55	-	0.75	0.93	1.12	1.34	1.59	1.87	2.21	2.59
60	-	0.60	0.75	0.91	1.09	1.30	1.53	1.80	2.12

Nominal performance at to = -10 °C, tc = 45 °C

Cooling capacity	6 709	W
Power input	3 513	W
Current consumption	6.83	A
Mass flow	238	kg/h
C.O.P.	1.91	

to: Evaporating temperature at dew point
tc: Condensing temperature at dew point
Rating conditions : Superheat = 10 K , Subcooling = 0 K

CERTIFIED PRODUCT ASERCOM

Pressure switch settings

Maximum HP switch setting	27.7	bar(g)
Minimum LP switch setting	0.2	bar(g)
LP pump down setting	0.9	bar(g)

Sound power data

Sound power level	81	dB(A)
With accoustic hood	74	dB(A)

All performance data +/- 5%

Danfoss can accept no responsibility for possible errors in catalogues, brochures and other printed material. Danfoss reserves the right to alter its products without notice.
This also applies to products already on order provided that such alternations can be made without subsequential changes being necessary in specifications already agreed.
All trademarks in this material are property of the respective companies. Danfoss, the Danfoss logotype and Maneurop are trademarks of Danfoss A/S. All rights reserved.

Performance data at 50 Hz, ARI rating conditions

R404A

Cond. temp. in °C (tc)	Evaporating temperature in °C (to)								
	-30	-25	-20	-15	-10	-5	0	5	10
Cooling capacity in W									
30	3 154	4 442	6 052	8 028	10 413	13 252	16 587	20 461	24 918
35	2 744	3 936	5 422	7 246	9 452	12 084	15 185	18 800	22 971
40	2 364	3 463	4 827	6 502	8 531	10 960	13 831	17 189	21 077
45	2 010	3 018	4 264	5 792	7 648	9 876	12 520	15 625	19 235
50	1 675	2 597	3 727	5 113	6 798	8 830	11 252	14 109	17 445
55	-	2 193	3 213	4 460	5 981	7 822	10 027	12 643	15 714
60	-	1 803	2 720	3 836	5 200	6 858	8 857	11 243	14 062
Power input in W									
30	2 050	2 351	2 635	2 896	3 130	3 334	3 503	3 632	3 718
35	2 058	2 386	2 697	2 988	3 254	3 491	3 694	3 860	3 983
40	2 055	2 413	2 757	3 082	3 383	3 657	3 898	4 104	4 269
45	2 038	2 431	2 810	3 173	3 513	3 827	4 112	4 361	4 572
50	2 002	2 433	2 853	3 256	3 640	3 999	4 329	4 626	4 886
55	-	2 417	2 880	3 329	3 759	4 167	4 547	4 896	5 209
60	-	2 377	2 888	3 386	3 867	4 327	4 761	5 165	5 535
Current consumption in A									
30	5.22	5.51	5.81	6.11	6.40	6.66	6.87	7.02	7.09
35	5.23	5.54	5.87	6.21	6.53	6.83	7.09	7.29	7.42
40	5.23	5.57	5.93	6.31	6.68	7.03	7.34	7.60	7.79
45	5.21	5.58	5.99	6.41	6.83	7.23	7.61	7.93	8.19
50	5.17	5.58	6.04	6.51	6.99	7.45	7.89	8.28	8.62
55	-	5.57	6.07	6.60	7.14	7.68	8.18	8.65	9.07
60	-	5.53	6.09	6.69	7.30	7.90	8.49	9.04	9.54
Mass flow in kg/h									
30	89	122	163	211	268	334	410	497	596
35	82	115	155	202	257	321	395	481	578
40	76	108	147	193	246	309	382	465	560
45	69	101	139	184	236	298	369	450	543
50	63	94	131	175	227	287	356	436	527
55	-	87	124	166	217	276	344	422	511
60	-	80	116	158	207	265	331	408	495
Coefficient of performance (C.O.P.)									
30	1.54	1.89	2.30	2.77	3.33	3.97	4.74	5.63	6.70
35	1.33	1.65	2.01	2.42	2.90	3.46	4.11	4.87	5.77
40	1.15	1.43	1.75	2.11	2.52	3.00	3.55	4.19	4.94
45	0.99	1.24	1.52	1.83	2.18	2.58	3.05	3.58	4.21
50	0.84	1.07	1.31	1.57	1.87	2.21	2.60	3.05	3.57
55	-	0.91	1.12	1.34	1.59	1.88	2.21	2.58	3.02
60	-	0.76	0.94	1.13	1.34	1.58	1.86	2.18	2.54

Nominal performance at to = -10 °C, tc = 45 °C

Cooling capacity	7 648	W
Power input	3 513	W
Current consumption	6.83	A
Mass flow	236	kg/h
C.O.P.	2.18	

to: Evaporating temperature at dew point
tc: Condensing temperature at dew point
Rating conditions : Superheat = 11.1 K , Subcooling = 8.3 K

Pressure switch settings

Maximum HP switch setting	27.7	bar(g)
Minimum LP switch setting	0.2	bar(g)
LP pump down setting	0.9	bar(g)

Sound power data

Sound power level	81	dB(A)
With accoustic hood	74	dB(A)

All performance data +/- 5%

Danfoss can accept no responsibility for possible errors in catalogues, brochures and other printed material. Danfoss reserves the right to alter its products without notice.
This also applies to products already on order provided that such alternations can be made without subsequential changes being necessary in specifications already agreed.
All trademarks in this material are property of the respective companies. Danfoss, the Danfoss logotype and Maneurop are trademarks of Danfoss A/S. All rights reserved.

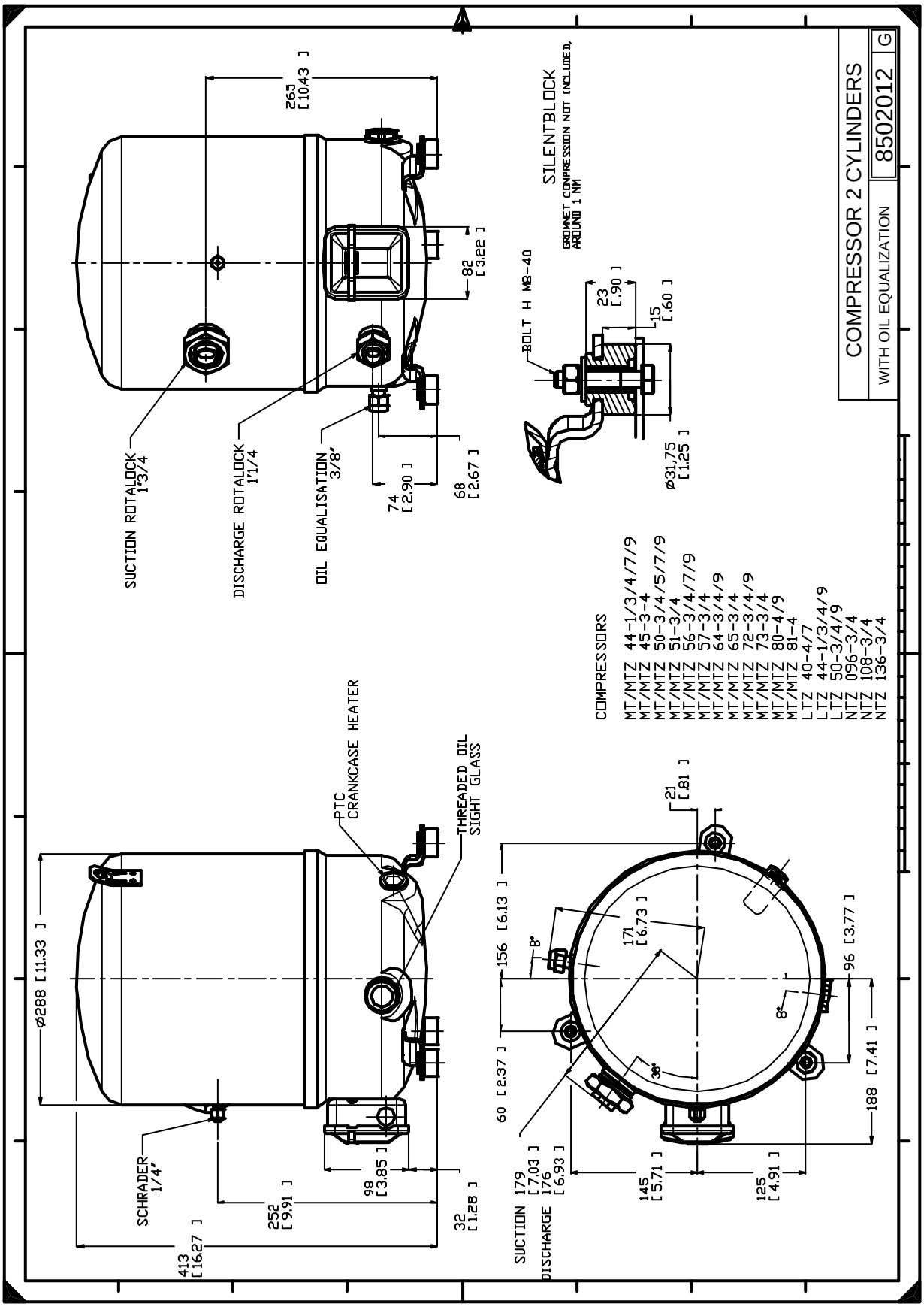

Danfoss can accept no responsibility for possible errors in catalogues, brochures and other printed material. Danfoss reserves the right to alter its products without notice.
This also applies to products already on order provided that such alternations can be made without subsequential changes being necessary in specifications already agreed.
All trademarks in this material are property of the respective companies. Danfoss, the Danfoss logotype and Maneurop are trademarks of Danfoss A/S. All rights reserved.